6161
POWER TRIODE

FORCED-AIR COOLED

Useful with full input up to 900 Mc
and with reduced input up to 2000 Mc

The 6161 supersedes type 5588 for new equipment design.

GENERAL DATA

Electrical:

Heater, for Unipotential Cathode:		
Voltage*	6.3 av.	.ac or dc volts
	6.9 max.	.ac or dc volts
Current at 6.3 volts	3.4	amp
Minimum heating time at 6.3 volts	1	minute
Amplification Factor for grid volts = −15, and plate ma. = 250	25	
Direct Interelectrode Capacitances:		
Grid to plate§	6	μμf
Grid to cathode and heater§	11	μμf
Plate to cathode and heater°	0.19	μμf ←

Mechanical:

Operating Position	Any
Overall Length	3-5/16" ± 3/32"
Greatest Diameter	1.750" ± 0.010"
Weight (Approx.)	8 oz ←
Radiator	Integral part of tube
Mounting	Special

Terminal Connections *(See Dimensional Outline):*

G – Grid

H – Heater

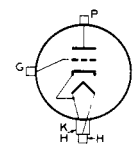

K – Cathode

P – Plate

Air Flow:

The specified air flow for various plate dissipations, as indicated in the tabulation below, should be delivered by a blower onto the respective terminals and seals, and through the radiator before and during the application of any voltages. Heater power, plate power, and air may be removed simultaneously.

Percentage of maximum-rated plate dissipation for each class of service	100	80	60	%
Minimum air flow	16	10	5.7	cfm
Static pressure	0.85	0.4	0.16	in. of water

*, §, °: See next page. ← Indicates a change.

ELECTRON TUBE DIVISION
RADIO CORPORATION OF AMERICA, HARRISON, NEW JERSEY

RCA

6161

POWER TRIODE

The above flow and pressure values are for condition with radiator temperature held constant at 135° C rise above incoming-air temperature. The air flow must be adequate to limit the temperature of the radiator, grid terminal, cathode terminal, and seals to their respective maximum values.

Radiator Temperature (Measured on core at end adjacent to plate flange)	180 max.	°C
Grid-Terminal Temperature	150 max.	°C
Cathode-Terminal Temperature	150 max.	°C
Seal Temperature (Plate, grid, and cathode)	150 max.	°C

RF POWER AMPLIFIER — Class B Television Service

Synchronizing-level conditions per tube unless otherwise specified

Maximum CCS• Ratings, *Absolute Values:*

DC PLATE VOLTAGE	1600 max.	volts
DC PLATE CURRENT	0.350 max.	amp
→ DC GRID CURRENT:		
Negative value	0.010 max.	amp
Positive value	0.100 max.	amp
PLATE INPUT	560 max.	watts
PLATE DISSIPATION	250 max.	watts

Typical Operation in Cathode-Drive Circuit at 600 Mc:

	Bandwidth♦ of 6 Mc	
DC Plate-to-Grid Voltage	1600	volts
DC Cathode-to-Grid Voltage	100	volts
Peak RF Cathode-to-Grid Voltage:		
Synchronizing level	130	volts
Pedestal level	117	volts
DC Plate Current:		
Synchronizing level	0.350	amp
Pedestal level	0.285	amp
DC Grid Current (Approx.):		
Synchronizing level	0.040	amp
Pedestal level	0.013	amp
Driver Power Output (Approx.):♣		
Synchronizing level	65#	watts
Pedestal level	40	watts
Output-Circuit Efficiency (Approx.)	89	%
Useful Power Output (Approx.):		
Synchronizing level	325••	watts
Pedestal level	195••	watts

Typical Operation in Cathode-Drive Circuit at 900 Mc:

	Bandwidth♦ of 6 Mc	
DC Plate-to-Grid Voltage	1600	volts
DC Cathode-to-Grid Voltage	100	volts

*, §, ○, •, ♦, ♣, #, ••: See next page. → Indicates a change.

6161

POWER TRIODE

Peak RF Cathode-to-Grid Voltage:		
Synchronizing level	135	volts
Pedestal level	120	volts
DC Plate Current:		
Synchronizing level	0.350	amp
Pedestal level	0.280	amp
DC Grid Current (Approx.):		
Synchronizing level	0.030	amp
Pedestal level	0.010	amp
Driver Power Output (Approx.):♣		
Synchronizing level	75⊕	watts
Pedestal level	45	watts
Output-Circuit Efficiency (Approx.)	65	%
Useful Power Output (Approx.):		
Synchronizing level	230●●	watts
Pedestal level	135●●	watts

BIAS-MODULATED RF POWER AMPLIFIER
Class C Television Service

Synchronizing-level conditions per tube unless otherwise specified

Maximum CCS● Ratings, *Absolute Values:*

DC PLATE VOLTAGE	1600 max.	volts
DC GRID VOLTAGE (White level)	-300 max.	volts
DC PLATE CURRENT	0.350 max.	amp
DC GRID CURRENT:		
Negative value	0.010 max.	amp
Positive value	0.100 max.	amp
PLATE INPUT	560 max.	watts
PLATE DISSIPATION	250 max.	watts

Typical Operation in Cathode-Drive Circuit at 600 Mc:

	Bandwidth♦ of 6 Mc	
DC Plate-to-Grid Voltage	1600	volts
DC Cathode-to-Grid Voltage:		
Synchronizing level	100	volts
Pedestal level	150	volts
White level	230	volts
Peak RF Cathode-to-Grid Voltage	130	volts
DC Plate Current:		
Synchronizing level	0.350	amp
Pedestal level	0.250	amp
DC Grid Current (Approx.):		
Synchronizing level	0.040	amp
Pedestal level	0.013	amp
Driver Power Output (Approx.):♣		
Synchronizing level	65#	watts
Output-Circuit Efficiency (Approx.)	89	%
Useful Power Output (Approx.):		
Synchronizing level	325●●	watts
Pedestal level	195●●	watts

*,§,○,●,♦,♣,#,●●,⊕: See next page. ← Indicates a change.

RCA

6161

POWER TRIODE

Typical Operation in Cathode-Drive Circuit at 900 Mc:

	Bandwidth♦ of 6 Mc	
DC Plate-to-Grid Voltage	1600	volts
DC Cathode-to-Grid Voltage:		
Synchronizing level	100	volts
Pedestal level	150	volts
White level	230	volts
Peak RF Cathode-to-Grid Voltage	135	volts
DC Plate Current:		
Synchronizing level	0.350	amp
Pedestal level	0.250	amp
DC Grid Current (Approx.):		
Synchronizing level	0.030	amp
Pedestal level	0.010	amp
Driver Power Output (Approx.):♣		
Synchronizing level	75⊕	watts
Output-Circuit Efficiency (Approx.)	65	%
Useful Power Output (Approx.):		
Synchronizing level	230●●	watts
Pedestal level	135●●	watts

PLATE-MODULATED RF POWER AMPLIFIER — Class C Telephony

Carrier conditions per tube for use with a max. modulation factor of 1.0

Maximum CCS● Ratings, *Absolute Values:*

DC PLATE VOLTAGE	1300 max.	volts
DC GRID VOLTAGE	-300 max.	volts
DC PLATE CURRENT	0.210 max.	amp
→ DC GRID CURRENT	*See Rating Chart*	
PLATE INPUT	270 max.	watts
PLATE DISSIPATION	167 max.	watts

Typical Operation in Cathode-Drive Circuit at 600 Mc:

DC Plate-to-Grid Voltage	1400	volts
DC Cathode-to-Grid Voltage	150	volts
Peak RF Cathode-to-Grid Voltage	200	volts
DC Plate Current	0.210	amp
DC Grid Current (Approx.)	0.070	amp
Driver Power Output (Approx.)♣■	70**	watts
Output-Circuit Efficiency (Approx.)	80	%
Useful Power Output (Approx.)	180●●	watts

Typical Operation in Cathode-Drive Circuit at 900 Mc:

DC Plate-to-Grid Voltage	1400	volts
DC Cathode-to-Grid Voltage	150	volts
Peak RF Cathode-to-Grid Voltage	200	volts
DC Plate Current	0.210	amp
DC Grid Current (Approx.)	0.070	amp
Driver Power Output (Approx.)♣■	75⊕	watts

*,§,○,●,♦,♣,#,■,⊕,■,/**,⊕: See next page. → Indicates a change.

6161
POWER TRIODE

Output-Circuit Efficiency (Approx.). . .	60	%
Useful Power Output (Approx.).	120●●	watts

RF POWER AMPLIFIER & OSCILLATOR — Class C Telegraphy□ and RF POWER AMPLIFIER — Class C FM Telephony

Maximum CCS● Ratings, *Absolute Values:*

DC PLATE VOLTAGE	1600 max.	volts
DC GRID VOLTAGE.	-300 max.	volts
DC PLATE CURRENT	0.250 max.	amp
DC GRID CURRENT.	*See Rating Chart*	←
PLATE INPUT.	400 max.	watts
PLATE DISSIPATION.	250 max.	watts

Typical Operation as Amplifier in Cathode-Drive Circuit at 600 Mc:

DC Plate-to-Grid Voltage	1650	volts
DC Cathode-to-Grid Voltage:		
From fixed supply of	150	volts
From cathode resistor of	500	ohms
Peak RF Cathode-to-Grid Voltage.	200	volts
DC Plate Current	0.250	amp
DC Grid Current (Approx.).	0.050	amp
Driver Power Output (Approx.)♣	75▲	watts
Output-Circuit Efficiency (Approx.). . .	82	%
Useful Power Output (Approx.).	270●●	watts

Typical Operation as Amplifier in Cathode-Drive Circuit at 900 Mc:

DC Plate-to-Grid-Voltage	1650	volts
DC Cathode-to-Grid Voltage:		
From fixed supply of	150	volts
From cathode resistor of	575	ohms
Peak RF Cathode-to-Grid Voltage.	200	volts
DC Plate Current	0.250	amp
DC Grid Current (Approx.).	0.010	amp
Driver Power Output (Approx.)♣	80†	watts
Output-Circuit Efficiency (Approx.). . .	60	%
Useful Power Output (Approx.).	180●●	watts

FREQUENCY MULTIPLIER — Class C

Maximum CCS● Ratings, *Absolute Values:*

DC PLATE VOLTAGE	1600 max.	volts
DC GRID VOLTAGE.	-300 max.	volts
DC PLATE CURRENT	0.250 max.	amp
DC GRID CURRENT.	*See Rating Chart*	←
PLATE INPUT.	400 max.	watts
PLATE DISSIPATION.	250 max.	watts

*,§,○,●,♦,♣,#,●●,⊕,■,**,❋,□,▲,†: See next page. ← Indicates a change.

RCA

6161

POWER TRIODE

Typical Operation in Cathode-Drive Circuit:

	Doubler to 600 Mc	*Doubler to 900 Mc*	
DC Plate-to-Grid Voltage. .	1760	1675	volts
DC Cathode-to-Grid Voltage:			
From fixed supply of. . .	260	175	volts
From cathode resistor of.	860	645	ohms
Peak RF Cathode-to-Grid Voltage.	300	300	volts
DC Plate Current.	0.250	0.250	amp
DC Grid Current (Approx.) .	0.050	0.021	amp
Driver Power Output (Approx.)♣.	125	100	watts
Output-Circuit Efficiency (Approx.)	90	80	%
Useful Power Output (Approx.)	180●●	140●●	watts

CHARACTERISTICS RANGE VALUES FOR EQUIPMENT DESIGN

	Note	*Min.*	*Max.*	
Heater Current.	1	3.05	3.75	amp
Amplification Factor.	1,2	18	32	
Direct Interelectrode Capacitances:				
Grid to plate	–	5.6	6.6	μμf
Grid to cathode and heater. . .	–	10.5	12.5	μμf
Plate to cathode and heater . .	3	0.12	0.26	μμf
Plate Voltage	1,4	500	850	volts
Plate Voltage	1,5	690	1140	volts
Grid Voltage.	1,6	–	-165	volts
Peak Cathode Current.	1,7	3.2	–	amp
Useful Power Output	1,8	225	–	watts

Note 1: With 6.3 volts ac on heater.

Note 2: With dc grid volts = -15, and dc plate voltage adjusted to give dc plate current of 250 ma.

Note 3: With external shield, as described under (○), connected to grid terminal.

Note 4: With dc grid volts = -10, and dc plate voltage adjusted to give dc plate current of 250 ma.

Note 5: With dc grid volts = -20, and dc plate voltage adjusted to give dc plate current of 250 ma.

Note 6: With dc plate volts = 1600, and dc grid voltage adjusted to give dc plate current of 1 ma.

Note 7: Designers should limit the maximum useable cathode current (plate current and grid current) to this value under any condition of operation.

Note 8: In a self-excited oscillator circuit with dc plate volts = 1600, dc plate ma. = 250, dc grid ma. = 50 to 75, grid resistor (ohms) = 2000 ± 10%, and frequency (Mc) = 15.

*,§,○,●,♦,♣,#,●●,⊕,■,**,❋,□,▲,†: See next page. →Indicates a change.

ELECTRON TUBE DIVISION
RADIO CORPORATION OF AMERICA, HARRISON, NEW JERSEY

6161

POWER TRIODE

* Because the cathode is subjected to considerable back bombardment as the frequency is increased with resultant increase in temperature, the heater voltage should be reduced depending on operating conditions and frequency to prevent overheating the cathode and resultant short life.

§ Without external shield.

○ With external flat shield 7-1/2" min. diameter located in plane of the grid terminal and perpendicular to axis of tube. Shield is connected to grid terminal.

● Continuous Commercial Service.

♦ Computed between half-power points and based on tube output capacitance only.

♣ The driver stage is required to supply tube losses, rf-circuit losses, and rf power added to plate input. The driver stage should be designed to provide an excess of power above the indicated value to take care of variations in line voltage, in components, in initial tube characteristics, and in tube characteristics during life.

\# This value includes 24 watts of circuit loss and 36 watts added to plate input.

●● This value of useful power is measured at load of output circuit having indicated efficiency.

⊕ This value includes 28 watts of circuit loss and 40 watts added to plate input.

■ In cathode-drive, plate-modulated class C rf power amplifier service, the 6161 can be modulated 100% if the rf driver stage is also modulated 100% simultaneously. Care should be taken to insure that the driver-modulation and amplifier-modulation voltages are exactly in phase.

** This value includes 18 watts of circuit loss and 40 watts added to plate input.

✙ This value includes 23 watts of circuit loss and 40 watts added to plate input.

□ Key-down conditions per tube without amplitude modulation. Modulation essentially negative may be used if the positive peak of the audio-frequency envelope does not exceed 115% of the carrier conditions.

▲ This value includes 18 watts of circuit loss and 45 watts added to plate input.

† This value includes 23 watts of circuit loss and 45 watts added to plate input.

MAXIMUM RATINGS vs OPERATING FREQUENCY

FREQUENCY	900	1200	1400	1650	2000	Mc
MAX.-PERMISSIBLE PERCENTAGE OF MAX.-RATED PLATE VOLTAGE AND PLATE INPUT:						
Class B television	100	80	71	62.5	62.5	%
Class C television, biased-modulated	100	80	71	62.5	62.5	%
Class C telephony, plate-modulated	100	80	71	62.5	62.5	%
Class C telegraphy	100	80	71	62.5	62.5	%
Class C FM telephony	100	80	71	62.5	62.5	%

RCA

6161

POWER TRIODE

OPERATING CONSIDERATIONS

In *tuning a cathode-drive rf amplifier*, it must be remembered that variations in the load on the output stage will produce corresponding variations in the load on the driving stage. This effect will be noticed by the simultaneous increase in plate currents of both the output and driving stages.

During *standby periods* of less than 15 minutes, it is recommended that the heater voltage be reduced to 80% of normal to conserve life; for longer standby periods, the heater power should be turned off.

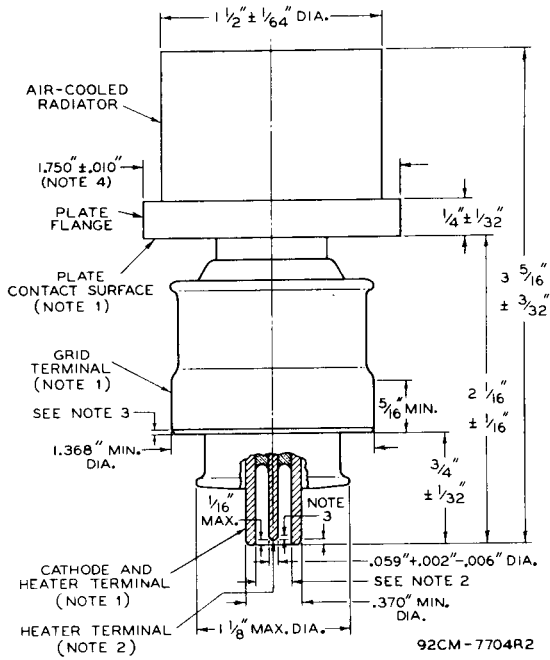

→ Indicates a change.

ELECTRON TUBE DIVISION
RADIO CORPORATION OF AMERICA, HARRISON, NEW JERSEY

6161

POWER TRIODE

NOTE 1: WITH THE CYLINDRICAL SURFACES OF ITS GRID AND CATHODE TERMINALS CLEAN, SMOOTH, AND FREE OF BURRS, THE TUBE WILL ENTER A GAUGE AS SHOWN IN SKETCH G_1. THE FOUR CYLINDRICAL HOLES H_1, H_2, H_3, and H_4 HAVE AXES COINCIDENT WITHIN 0.0005", LENGTHS DETERMINED FROM THE DIMENSIONAL OUTLINE, AND SUCCESSIVELY SMALLER DIAMETERS AS SHOWN IN THE SKETCH.

THE PLATE FLANGE WILL BE ENTIRELY ENGAGED BY HOLE H_1, AND THE CONTACT SURFACE OF THE PLATE FLANGE WILL SEAT ON THE SHOULDER BETWEEN HOLES H_1 AND H_2. THE PLANE SURFACE OF THIS SHOULDER IS $90^\circ \pm 2'$ TO THE AXES OF THE HOLES. SEATING IS DETERMINED BY FAILURE OF A 0.005"-THICKNESS GAUGE, 1/8" WIDE, TO ENTER MORE THAN 1/16" BETWEEN THE SHOULDER SURFACE AND THE PLATE CONTACT SURFACE.

WITH THE TUBE PROPERLY SEATED AS DESCRIBED ABOVE, THE GRID TERMINAL WILL BE ENTIRELY ENGAGED BY HOLE H_3, AND THE CATHODE TERMINAL WILL BE ENGAGED BY HOLE H_4 TO A DEPTH OF AT LEAST 1/4".

NOTE 2: CONCENTRICITY OF THE HEATER TERMINAL WITH RESPECT TO THE CATHODE TERMINAL IS DETERMINED BY A GAUGE AS SHOWN IN SKETCH G_2. THE CYLINDRICAL HOLE H_5 AND THE ANNULAR HOLE H_6 HAVE AXES COINCIDENT WITHIN 0.0005". THE CATHODE TERMINAL AND THE HEATER TERMINAL WILL ENTER THIS GAUGE TO A DEPTH OF 3/8".

NOTE 3: MAY BE ROUNDED OR BEVELED NOT TO EXCEED 1/16".

NOTE 4: THE AVERAGE OF THE MINIMUM DIAMETER AND THAT MEASURED 90° FROM THE MINIMUM WILL BE WITHIN THE SPECIFIED RANGE, AND THE DIFFERENCE BETWEEN THESE TWO MEASUREMENTS WILL NOT EXCEED .010".

ELECTRON TUBE DIVISION
RADIO CORPORATION OF AMERICA, HARRISON, NEW JERSEY

6161

POWER TRIODE

SKETCH G_1

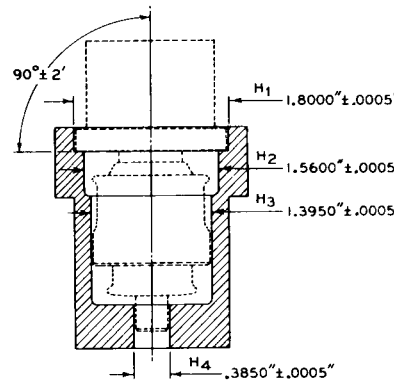

SKETCH G_2

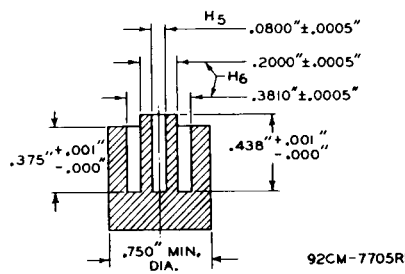

6161

POWER TRIODE

MOUNTING ARRANGEMENT FOR USE WITH COAXIAL-LINE-OR CAVITY CIRCUITS

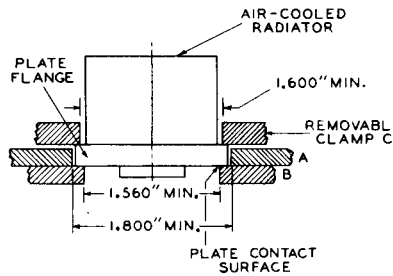

92CS-6833R2

6161

RCA

6161

RATING CHART

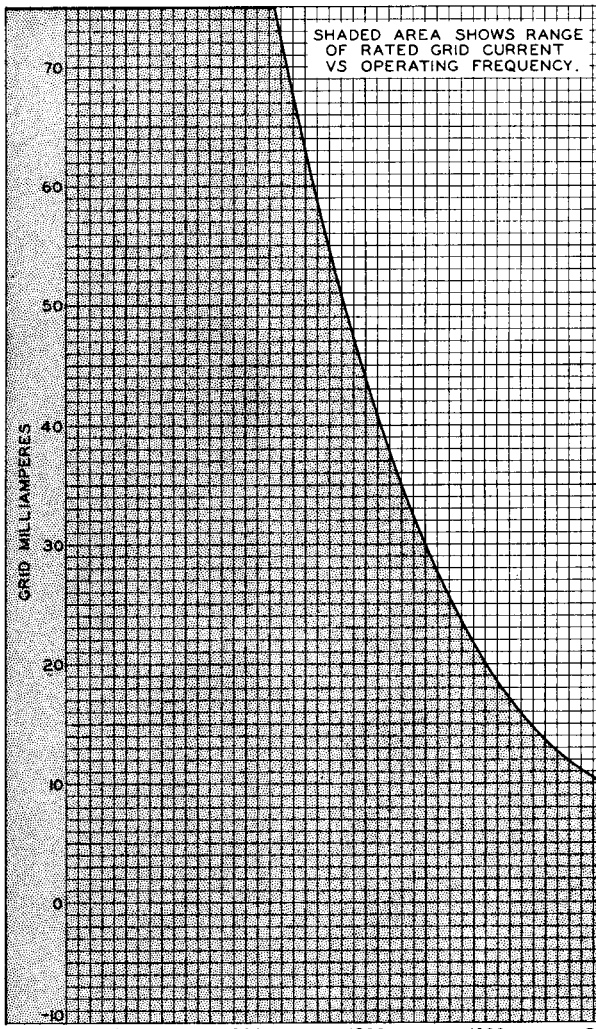

ELECTRON TUBE DIVISION
RADIO CORPORATION OF AMERICA, HARRISON, NEW JERSEY

92CM-8321

RCA

6161

AVERAGE CHARACTERISTICS

ELECTRON TUBE DIVISION
RADIO CORPORATION OF AMERICA, HARRISON, NEW JERSEY
92CL-7771RI